SAMPLE COPY. CLICK HERE TO PURCHASE THE FULL E-BOOK.

Construction and specifications

Roller chain construction and types

General single strand. Roller chain is a series of alternating pin links and roller links in which the pins can turn inside the bushings (**Figure CH-1**).

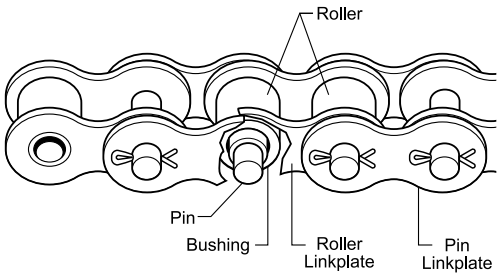

Figure CH-1: Roller chain construction.

The pin link (**Figure CH-2**) consists of two pins (A) assembled into two pin link plates (C) with controlled press fits to prevent the pins from rotating in the pin link plates.

The roller link (**Figure CH-2**) consists of two bushings (B) assembled into two roller link plates (E) with controlled press fits to prevent the bushing from rotating in the roller link plates. Two rollers (D) are assembled, free to turn, on the outside of the bushings.

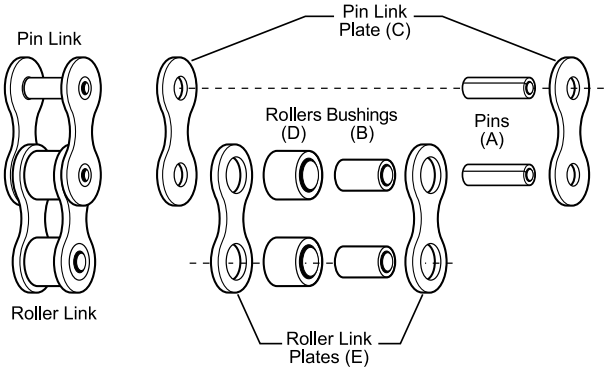

Figure CH-2: Pin link and roller link.

As the chain articulates, turning occurs only between the pin and bushing, so they are primarily subject to wear. The link plates mainly bear the tensile loads and securely locate the pins and bushings. The rollers absorb the impact and provide rolling action when the chain joint engages the sprocket tooth.

Roller chain may be furnished with either riveted or cottered with either riveted or cottered-type pins (**Figures CH-3** and **CH-4**). Riveted-type pins have both ends riveted or swagged. Cottered-type pins have one end riveted or swagged and the other end cross-drilled to accept a cotter pin. Cotter pins for roller chain are carefully formed to fit snugly in the hole and are often heat-treated for high strength and toughness. This prevents the cotter pins from being thrown out of the chain by high speed or vibration.

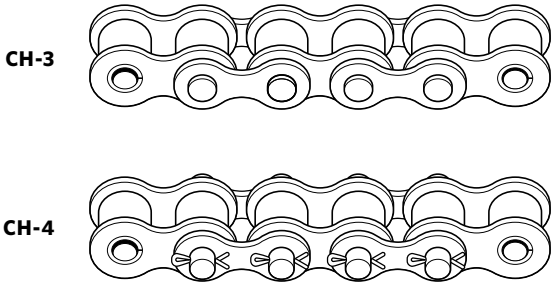

Figure CH-3: Riveted-type single-strand chain.
Figure CH-4 shows a cottered-type single-strand chain.

Multiple strand chain. Multiple strand chain consists of two or more single strands assembled on common pins. Multiple strand chains may be furnished with either riveted or cottered-type pins (**Figures CH-5** and **CH-6**). Multiple-strand chains may also be furnished with either slip-fit or press-fit plates (**Figure CH-7**).

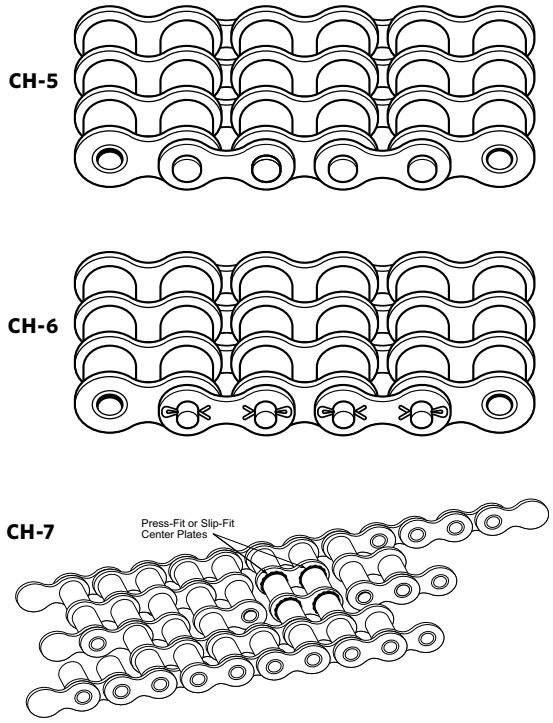

Figure CH-5: Multiple strand chain furnished with riveted pins.
Figure CH-6: Multiple strand chain with cotter pins.
Figure CH-7: Multiple-strand chain may have either press-fit or slip-fit center plates.

Slip-fit center plates have holes that are slightly larger than the pin and can be easily moved, or slipped, on and off of the pins. Slip-fit center plate multiple-strand chain can be readily disconnected in the field at any cottered pin link in the chain.

 Copyright © 2014 IADC

SAMPLE COPY. CLICK HERE TO PURCHASE THE FULL E-BOOK.

Press-fit center plates have holes that are slightly smaller than the pin and must be driven, or pressed, on and off of the pins. Press-fit center plate multiple-strand chain normally can be disconnected in the field only at the connecting link with special pressing equipment.

Both types have their advantages. Contact the chain manufacturer or representative for specific applications and benefits.

Connecting links

A connecting link is a pin link with a quick detachable retainer that normally is used to connect the two ends of a chain together to make it endless on a drive. There are three common types of connecting links with respect to retainers. They are the spring-clip type (**Figure CH-8**) the split cotter type, (**CH-9**) and single hook cotter type, (**CH-9A**).

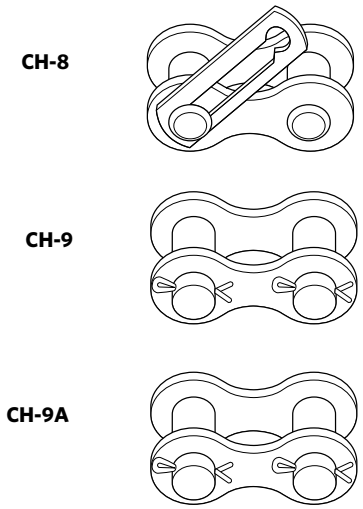

Figure CH-8 (top) shows spring-type clip, while **Figure CH-9** (center) shows the split cotter type and **Figure CH-9A** shows the single-hook cotter type.

The cotter-type connecting links look and sometimes are the same as the pin link in cottered-type chain.

There also are two common types of connecting links with respect to cover plates or CO link plates. They are the press-fit type in which the cover plate has an interference fit on the pins. The press-fit cover plate connecting link has the working capacity that is virtually equal to single-strand or work-slip multiple-strand chain and it is preferred for maximum capacity rating. The slip-fit cover plate connecting link used in conjunction with fatigue resistant slip fit center plates and where ease of coupling and uncoupling is important will provide ample working load in 95% of the applications.

Offset links

Offset links are combination links with a specially designed bend in the middle so that one end functions as pin link and the other end as a roller link. Offset links as with connecting links can be slip fit or press fit. The single-pitch offset link has a slip-fit, removable "D" flatted pin with a flat milled on one end that fits into a "D" shaped hole in the link plate (**Figure CH-10**).

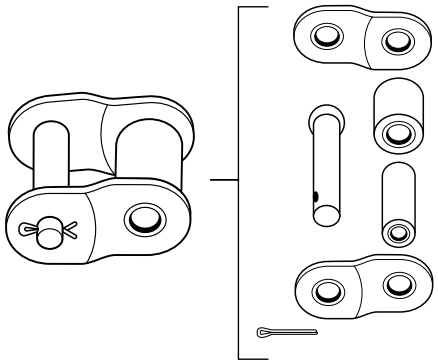

Figure CH-10: Offset link.

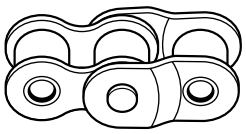

Figure CH-11: Two-pitch offset section.

An offset section may be a two-pitch (**Figure CH-11**) press fit assembly.

NOTE: Avoid the use of offset links whenever possible. If an offset link is required, an offset section should be used because the press-fit pins give it higher working capacity.

Applicable standards & specifications

ANSI Standard ASME B29.1

The ANSI standard ASME B29.1 defines power transmission roller chain, establishes a numbering system, and dictates limiting dimensions, chain length tolerance, and minimum chain tensile strength. This standard also defines sprockets for roller chain and sets tolerances or limits on critical sprocket dimensions.

API Specification 7F 8th edition

The API specification 7F refers to ANSI B29.1 for chain and sprocket definition, numbering, dimensions, and chain tensile strength. In addition, API specification 7F dictates minimum dynamic test requirements per the conformance test described in ASME B29.26 and minimum dynamic strength and pin and bushing press-out-forces approved in 2010 for each chain size. *Note:* There are no approved API offset/half links.

 Copyright © 2014 IADC

SAMPLE COPY. CLICK HERE TO PURCHASE THE FULL E-BOOK.

Roller chain numbering & dimensions

General dimensions

Table CH-1 lists chains commonly used in the oilfield. The general dimensions of ASMEI B29.1 precision standard roller chain are shown in **Tables CH-1A** (in.) and **CH-1B** (mm). The most important basic dimension of a roller chain is the pitch (P) which is the nominal distance between consecutive chain pins. Other key dimensions are proportional to the pitch. The roller diameter (Dr) and roller width (W) are approximately ⅝ of the pitch. The pin diameter (Dp) is approximately 5⁄16 of the pitch. The link plate thickness (LPT), for Standard Series chain, is approximately ⅛ of the pitch. The link plate thickness (LPT), for Heavy Series chain, is that of the next larger pitch standard series chain.

The measuring load and minimum ultimate tensile strength of multiple strand chains is the single strand values multiplied by the number of strands. Measuring load is limited to a maximum of 1,000 lb. (4,448 N).

Roller chain numbering

Standard roller chains are designated by a numbering system which is defined in ANSI Standard ASME B29.1. This numbering system is based on standard dimensions that are pitch proportional; that is the major dimensions of a standard roller chain are proportional to the chain pitch.

Standard single-strand, single-pitch chain is identified by a two- or three-digit number. The right-hand digit is a zero for chain of standard proportions and containing a free roller, a 1 for lightweight chain, and 5 for rollerless bushing chain. The left-hand digit or digits indicate the number of ⅛-in. increments in the pitch. For example, a standard ¾-in. pitch roller chain has 6 increments of ⅛-in. in the pitch, so the number is 60.

"Heavy" series chains have link plate thickness equal to the next larger standard size chain and are designated by the letter H immediately following the standard chain number. IE; 80H or 160H.

Multiple-strand chain is designated by a hyphen and one or two digits indicating the number of chain strands. IE: 60-10 or 120H-3.

Table CH-1: Common oilfield chains.

Pitch	⅛ ths	Std. No.	Heavy No.
0.25	2	25-Rollerless	none
0.375	3	35-Rollerless	none
0.50	4	41-Light Duty	none
0.50	4	40	none
0.625	5	50	none
0.75	6	60	60H
1.00	8	80	80H
1.25	10	100	l00H
1.50	12	120	120H
1.75	14	140	140H
2.00	16	160	160H
2.25	18	180	180H
2.50	20	200	200H
3.00	24	240	240H

 Copyright © 2014 IADC

SAMPLE COPY. CLICK HERE TO PURCHASE THE FULL E-BOOK.

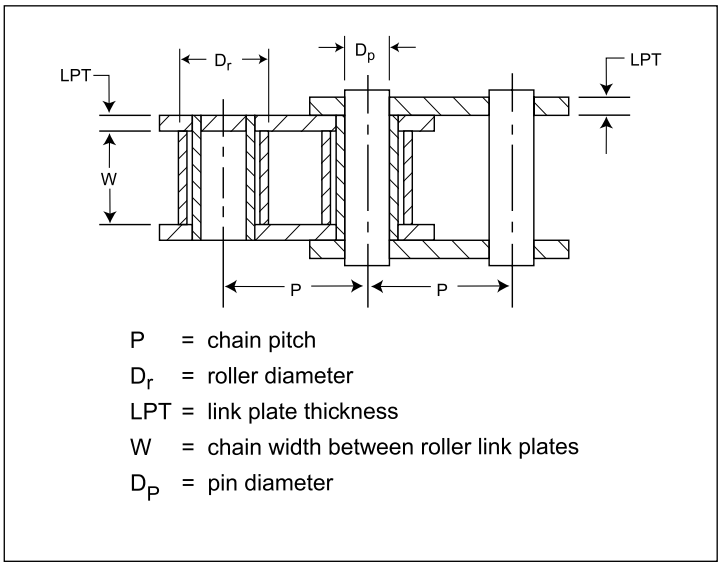

Figure CH-12A: General chain dimensions. See **Table CH-2A**.

Table CH-2A: General chain dimensions, in.

					Link Plate Thickness (LPT)				
Standard Chain No.	Pitch P	Max. Roller Diam D_r	Nominal Width W(I)	Nominal Pin Diam. D_p	Standard Series	Heavy Searies	Measuing Load lb(2)	Lenghth Tolerance in./ft	Min. Ultimate Tensile Strength Standard and Heavy Series lb(3)
25	0.250	0.130(4)	0.125	0.0905	0.030	—	18	0.031	780
35	0.375	0.200(4)	0.188	0.414	0.050	—	18	0.022	1,760
41	0.500	0.306	0.250	0.141	0.050	—	18	0.019	1,500
40	0.500	0.312	0.312	0.156	0.060	—	31	0.019	3,125
50	0.625	0.400	0.375	0.200	0.080	—	49	0.018	4,880
60	0.750	0.469	0.500	0.234	0.094	0.125	70	0.017	7,030
80	1.000	0.625	0.625	0.312	0.125	0.156	125	0.016	12,500
100	1.250	0.750	0.750	0.375	0.158	0.187	195	0.016	19,530
120	1,500	0.875	1,000	0.437	0.187	0.219	281	0.015	28,125
140	1.750	1.000	1.000	0.500	0.219	0.250	383	0.015	38,280
160	2.000	1.125	1.250	0.562	0.250	0.281	500	0.015	50,000
180	2.250	1.406	1.406	0.687	0.281	0.312	633	0.015	63,280
200	2.500	1.562	1.500	0.781	0.312	0.375	781	0.015	78,125
240	3.000	1.875	1.875	0.937	0.375	0.500	1000	0.015	112,500

NOTES:
(I) See ANSI ASME B29.1 minimum dimensions
(2) For single-strand chain.
(3) For single-strand chain
(4) Bushing diameter, as these chains have no rollers.

 Copyright © 2014 IADC

SAMPLE COPY. CLICK HERE TO PURCHASE THE FULL E-BOOK.

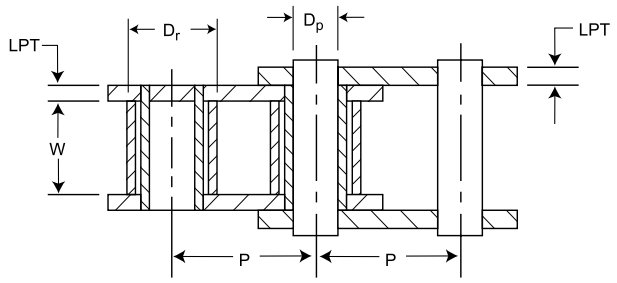

P = chain pitch
D_r = roller diameter
LPT = link plate thickness
W = chain width between roller link plates
D_P = pin diameter

Figure CH-12B: General chain dimensions. See Table CH-2B.

Table CH-2A: General chain dimensions, in. (cont'd)

Standard Chain No.	Pitch P	Max. Roller Diam D_r	Nominal Width W(I)	Nominal Pin Diam. D_p	Link Plate Thickness (LPT) Standard Series	Link Plate Thickness (LPT) Heavy Searies	Measuing Load N(2)	Lenghth Tolerance MM/M	Min. Ultimate Tensile Strength Standard and Heavy Series N(3)
25	6.35	3.30(4)	3.18	2.30	0.76	—	80.1	2.58	3,470
35	9.52	5.08(4)	4.78	3.58	1.27	—	80.1	1.83	7,825
41	12.70	7.77	6.35	3.58	1.27	—	80.1	1.58	6,672
40	12.70	7.92	7.92	3.96	1.52	—	137.9	1.58	13,900
50	15.88	10.16	9.52	5.08	2.03	—	218.0	1.50	21,270
60	19.05	11.91	12.70	5.94	2.39	3.18	311.4	1.42	31,270
80	25.40	15.87	15.88	7.92	3.18	3.96	556.0	1.33	55,600
100	31.75	19.05	19.05	9.52	3.96	4.75	867.4	1.33	86,870
120	38.10	22.22	25.40	11.10	4.75	5.56	1250.0	1.25	125,100
140	44.45	25.40	25.40	12.70	5.56	6.35	1704.0	1.25	170,270
160	50.80	28.57	31.75	14.27	6.35	7.14	2224.0	1.25	222,400
180	57.15	35.71	35.71	17.45	7.14	7.92	2816.0	1.25	281,470
200	63.50	39.67	38.10	19.84	7.92	9.52	3474.0	1.25	347,500
240	76.20	47.62	47.62	23.80	9.52	12.70	5004.0	1.25	520,400

NOTES:
(I) See ANSI ASME B29.1 minimum dimensions
(2) For single-strand chain
(3) For single-strand chain
(4) Bushing diameter, as these chains have no rollers

 Copyright © 2014 IADC